Special Purpose Drilling Machine Used for Balancing Conveyor Rollers

Serial Number: OL0030-0209

Designed and Manufactured by O L Engineering Solutions

Special Purpose Machines, Engineering CAD Design

Mobile: 0419274035 – Email: info@olengineering.com

Website: www.olengineering.com

Index

1. Machine assembly drawing
2. Drilling procedure
3. Control Buttons
4. Electrical circuit
5. PLC Ladder diagram
6. Pneumatic circuit
7. BEM20 Technical Document

1. Machine assembly drawing

RevNo	Revision note	Date	Signature	Checked

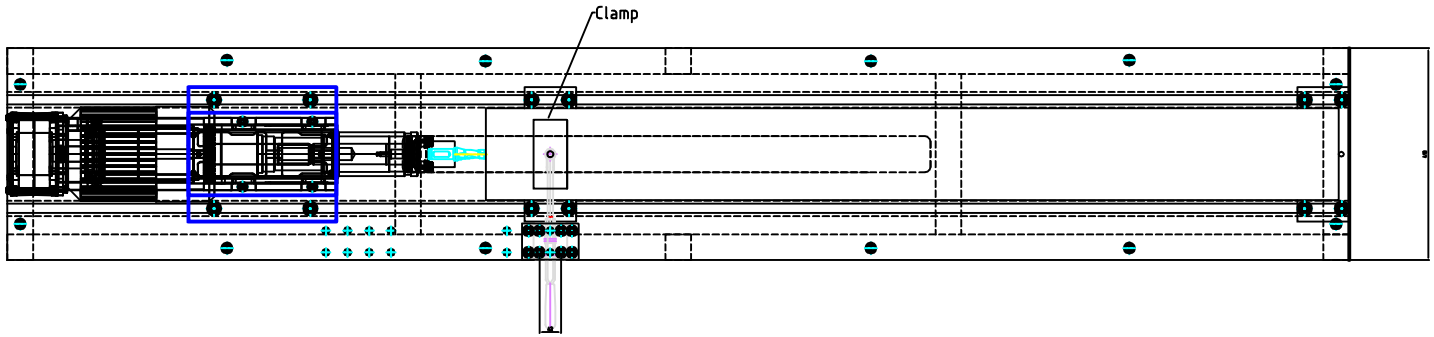

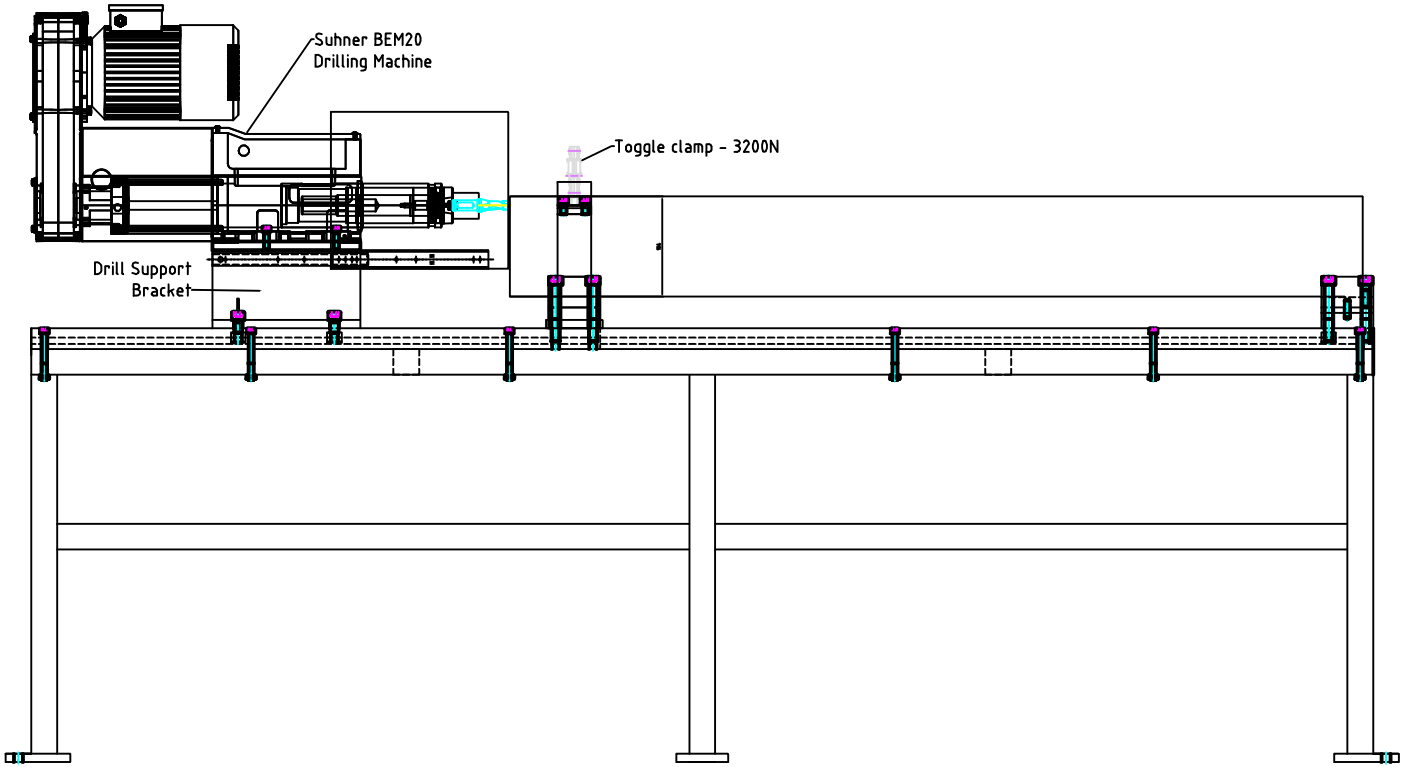

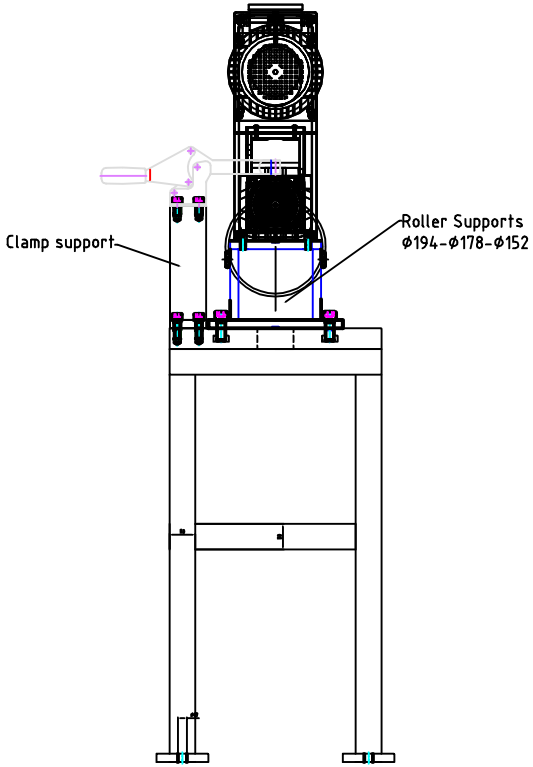

Itemref	Quantity	Continental Conveyors			Article No./Reference	
OL DESIGNED_BY		CHECKED_BY	APPROVED_BY_DATE	FILENAME	03/11/08 DATE	Scale SCALE
OL-ENGINEERING-SOLUTIONS Design Propety of OL Engineering Solutions				DRILLING-MACHINE		
				OL0030	Edition EDITION	Sheet SHEET

2. Drilling procedure

2. Drilling Procedure

1) Select appropriate support blocks for tube size to be drilled (152,178,194 O.D. Roller)

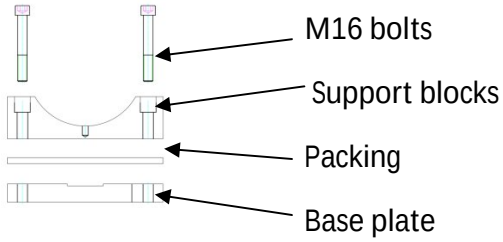

2) For 13mm drill use 8mm thick packing , for 17mm drill use 10mm thick packing.
3) Set adjustable block to accommodate roller length as follows:
   a) With the machine guard open, press the forward button and hold until it reaches the rapid traverse stroke.
   b) Load roller on the appropriate support blocks and leave approximately 10 mm gap from the tip of drill to the roller face.

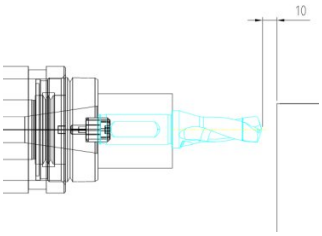

   c) Ensure the stopper pin is touching the end of the roller.
   d) Secure the adjustable roller support.
4) Clamp roller using toggle clamp.
5) Close the guard.
6) Press start button to initiate the following cycle:
   a) Drilling machine starts
   b) Drill advances in rapid mode to set distance (for set up see machine Manual- Suhner-BEM20) at the back of the manual).
   c) Drill will feed to determined depth.
   d) Drill retracts to original position.
   e) Drill stops.
7) Guard can be opened.
8) Cycle completed.
9) Load next roller
10) Close guard then cycle will start again

3. Control Buttons

3. Controls

Emergency Stop Forward Reverse

Cycle start Cycle stop

Note: Forward and reverse buttons are used for setting up only; they will only work when guard is open.